7772 B Ratchet insert, reversible, 9x12 mm, 9x12 x 3/8" x 52 mm

Series Insert Tools



EAN:	4013288196446	**Size:**	122x83x37 mm
Part number:	05078636001	**Weight:**	164 g
Article number:	7772 B	**Country of origin:**	TW
		Customs tariff number:	82079099

- For torque wrenches of the Click-Torque X series with 9x12 mm holder
- For 3/8" square socket wrench inserts and 3/8" connecting parts with square drive
- Fine toothing with 72 teeth
- Easy switching by knob
- Socket lock by push button

Ratchet insert, reversible, for 3/8" square socket wrench inserts and 3/8" connecting parts with square drive; for torque wrenches of the Click-Torque X series with 9x12 mm holder.

Web link
https://products.wera.de/en/torque_tools_series_click-torque_wrenches_series_insert_tools_7772_b.html

Wera - 7772 B
05078636001 - 4013288196446

Wera Werkzeuge GmbH
Korzerter Straße 21-25
D-42349 Wuppertal
Tel: +49 (0)2 02 / 40 45-0
E-Mail: info@wera.de

7772 B Ratchet insert, reversible, 9x12 mm, 9x12 x 3/8" x 52 mm

Series Insert Tools

Drive 9x12 mm



For torque wrenches of the Click-Torque X series with 9x12 mm holder.

Small return angle



Fine-pitched with 72 teeth for a return angle of only 5°

3/8" external square

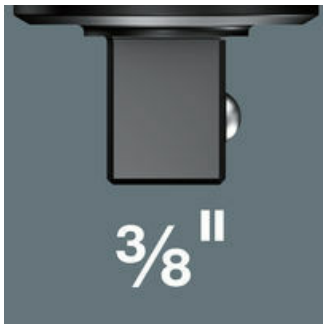

For 3/8" square socket wrench inserts and 3/8" connecting parts with square drive.

Easy switching

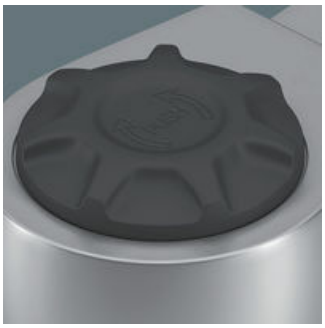

Easy switching by knob.

Secure socket locking



Safe socket lock via push button

Chrome vanadium steel



The chrome-vanadium steel version makes the plug-in tools suitable for heavy loads.

Further versions in this product family:

	mm	inch	mm	mm	mm	mm	mm
05078636001	9x12	3/8"	17.5	52.0	35.0	35	21.0

Web link

https://products.wera.de/en/torque_tools_series_click-torque_wrenches_series_insert_tools_7772_b.html

Wera - 7772 B
05078636001 - 4013288196446

Wera Werkzeuge GmbH
Korzerter Straße 21-25
D-42349 Wuppertal
Tel: +49 (0)2 02 / 40 45-0
E-Mail: info@wera.de