SOUTHCO®	SOUTHCO NO. 24 FASTENER-HEAVY DUTY ADAPTABLE FOR 3 POINT LATCH-TYPE B	DATE	DRAWN	CHKD	SCALE	DRAWING NUMBER
		12MAY58	DST		1:2	J-24-10-412-10

REV.	DATE	BY-CHKD	REVISIONS
W	29NOV95	AJH	PRN: 24-158
X	07MAY97	SWD	PRN: 24-176

ITEM	COMPONENTS	PART NO.	MATERIAL AND FINISH
ASSEMBLY	— — — — —	24-10-412-10	— —
CUP-HOUSING SUB ASSY	— — — — —	24-11-102-11	STEEL - DACROTIZED
SCREW-HANDLE SUB ASSY	— — — — —	24-31-101-10	— —
	SCREW	— — — — —	STEEL - DACROTIZED
	HANDLE	— — — — —	ZINC DIE CAST - DACROTIZED
	GROOVE-PIN	— — — — —	STEEL-ZINC PLATE PER QQ-2-325 TY I CL.2 PLUS CHROMATE DIP - BRIGHT
	CUPPED WASHER	— — — — —	STEEL - DACROTIZED
SEAL	— — — — —	24-21-101-18	SYNTHETIC RUBBER-BLACK
PAWL	— — — — —	24-19-101-15	MALL. IRON- ZINC PLATE PER QQ-2-325 TY.II CL.3 CHROMATE DIP - YELLOW
JAM NUTS	— — — — —	24-0-2343-09	STEEL-ZINC PLATE CHROMATE, PLUS SEALER
ACTUATOR	— — — — —	24-18-101-15	STEEL-DACROTIZED
'U' BENT WASHER	— — — — —	24-0-2578-13	STEEL-ZINC PLATE PER QQ-2-325 TY.II CL.2 CHROMATE DIP-YELLOW
'X' WASHER	— — — — —	24-0-2394-08	STEEL-ZINC PLATE PER QQ-2-325 TY.II CL.2 CHROMATE DIP-YELLOW
WEAR WASHER	— — — — —	24-0-19200-12	NYLON-BLACK

THESE ASSEMBLIES ARE NON-REPAIRABLE ITEMS AND COMPONENTS ARE NOT AVAILABLE AS REPLACEMENT OR REPAIR PARTS

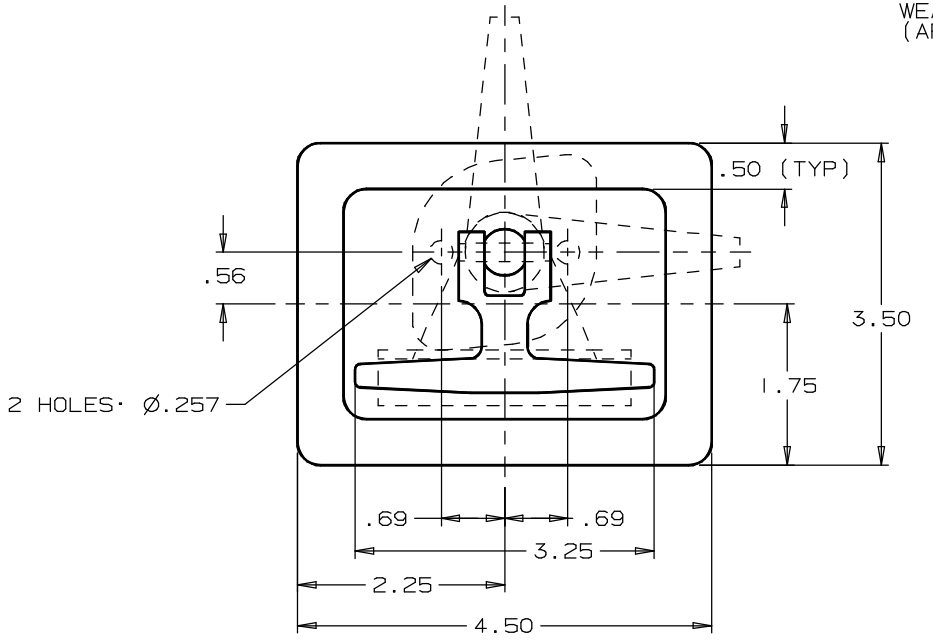

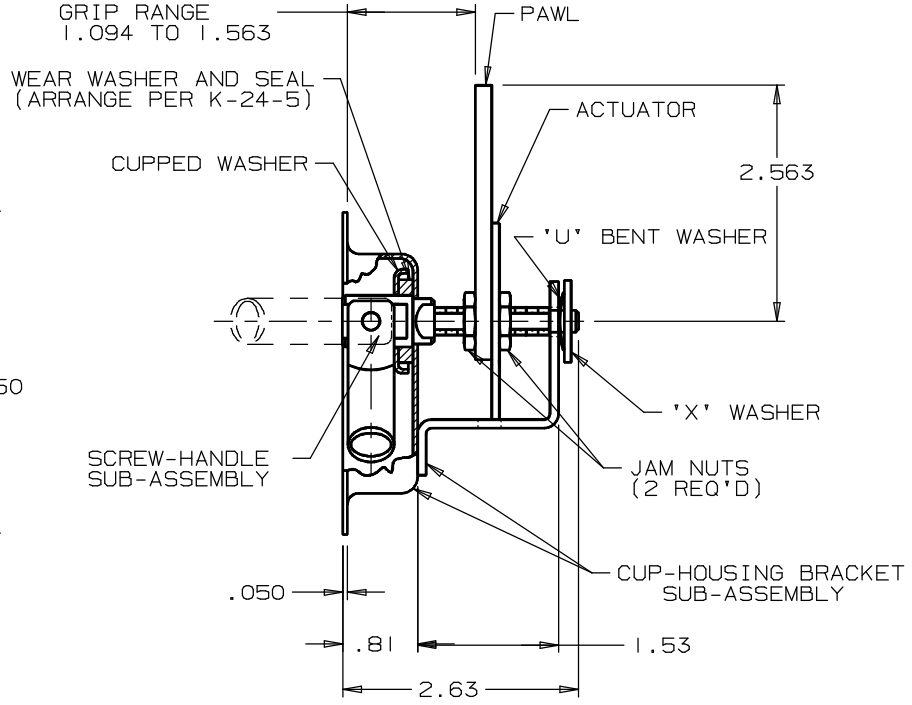

FORMATA 1 MAR 94

PROPRIETARY ITEM - EXCEPT FOR USES EXPRESSLY GRANTED IN WRITING INFORMATION DISCLOSED HEREON IS CONFIDENTIAL AND ALL RIGHTS PATENT AND OTHERWISE ARE RESERVED BY SOUTHCO, INC.

DRAWING NUMBER
J-24-10-412-10