NOTES:

A. MATERIAL AND FINISH:
PLUG BODY - DIE CAST ZINC
TUMBLERS - BRASS
KEYS - BRASS, NICKEL PLATED
SPRING MATERIAL OPTIONAL. SPRING MATERIAL MUST BE STAINLESS STEEL, IF POWDER COATED AFTER ASSEMBLY OR PURCHASED AS PK-110 C_1C_2

FINISH: BRIGHT CHROMATE, TOP SURFACE OF HEAD TO BE BUFFED BEFORE PLATING.

B. TIGHTENING TORQUE OF MOUNTING NUTS NOT TO EXCEED 25 in-lbs

C. MOUNTING HEX NUT AND LOCKWASHER 4 EACH INCLUDED ASSEMBLED

southco

PROPRIETARY ITEM - EXCEPT FOR USES EXPRESSLY GRANTED IN WRITING INFORMATION DISCLOSED HEREON IS CONFIDENTIAL AND ALL RIGHTS PATENT AND OTHERWISE ARE RESERVED BY SOUTHCO, INC.

No.24 FLUSH LATCH MANUAL ADJUSTING-TYPE B (STUD MOUNT)W/LOCK(KEYED ALIKE),STAINLESS STEEL CUP

DATE	DRAWN	CHKD	SCALE	DRAWING NUMBER
5-8-86	RJB		.75:1	J-24-20-912-35

REV	DATE	DRAWN/CHKD	DESCRIPTION
J	20MAY97	SWD	PRN: 24-176
K	18MAY2004	RLR/AJH	PRN: P2004-0492
L	12APR2005	BRP/AJH	PRN: P2005-0592
M	31JAN2014	CMS/BGL	PRN: P2014-0207

ITEM	PART NUMBER	MATERIAL	FINISH
ASSEMBLY	24-20-912-35	-	-
GROOVE PIN	-	STEEL	ZINC PLATE PLUS BRIGHT CHROMATE
SCREW	-	STEEL	CHROME PLATE
CONICAL SPRING	-	STAINLESS STEEL	PASSIVATE
PAWL	-	STEEL	ZINC FLAKE COATING
JAM NUT(2)	-	STEEL	ZINC PLATE CHROMATE PLUS SEALER
ACTUATOR	-	STEEL	ZINC FLAKE COATING
LOCK PLUG	-	SEE NOTE A	SEE NOTE A
HANDLE	-	DIE CAST ZINC	CHROME PLATE
LOCK CYLINDER	-	DIE CAST ZINC	BRIGHT CHROMATE
SPACER	-	STEEL	CHROME PLATE
LOCK ARM	-	STEEL	ZINC FLAKE COATING
HEX NUT	-	DIE CAST ZINC	ACRYLIC LATEX SEALER
SCREWS(2)	-	STAINLESS STEEL	PASSIVATE
U BENT WASHER	-	STEEL	ZINC PLATE PLUS YELLOW CHROMATE DIP
C RETAINER	-	STEEL	ZINC PLATE PLUS YELLOW CHROMATE DIP
CUPWASHER	-	STEEL	CHROME PLATE
CUP ASSEMBLY	-	STAINLESS STEEL	ELECTROPOLISH
LOCKWASHER(2)	-	STEEL	ZINC PLATE PLUS YELLOW CHROMATE DIP
HEX NUT(4)	-	STAINLESS STEEL	PASSIVATE
LOCKWASHER(4)	-	STAINLESS STEEL	PASSIVATE

INCHES

ALL DIMENSIONS WITHOUT TOLERANCES ARE FOR REFERENCE ONLY.

THIRD ANGLE PROJECTION

B PAPER SIZE

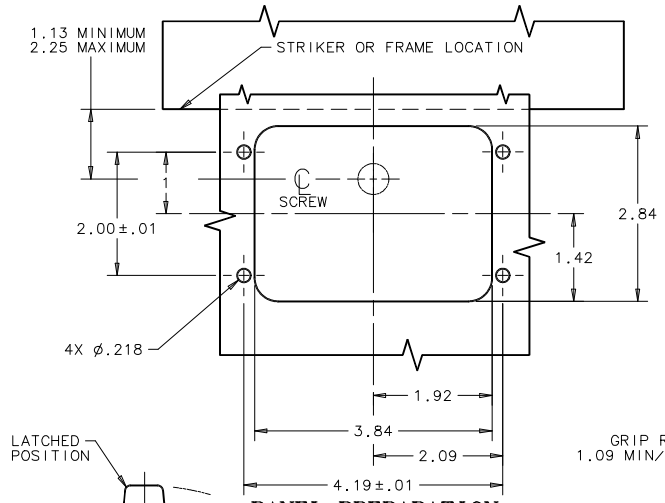
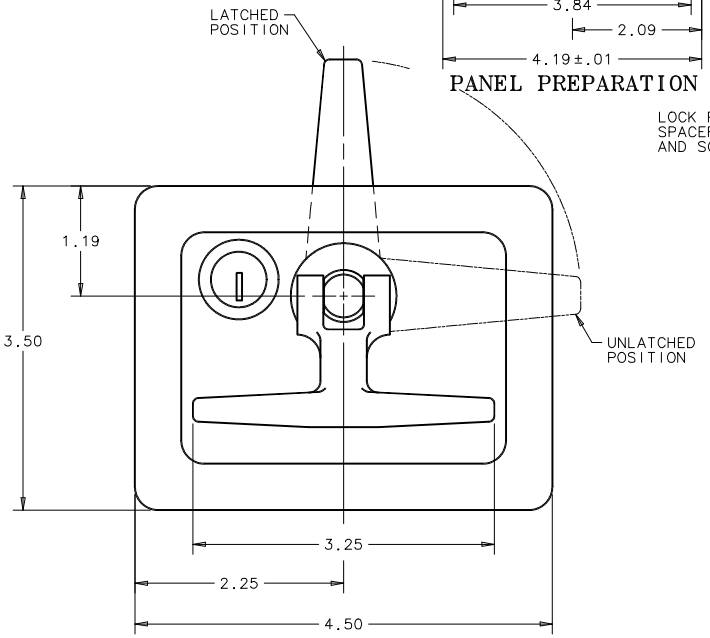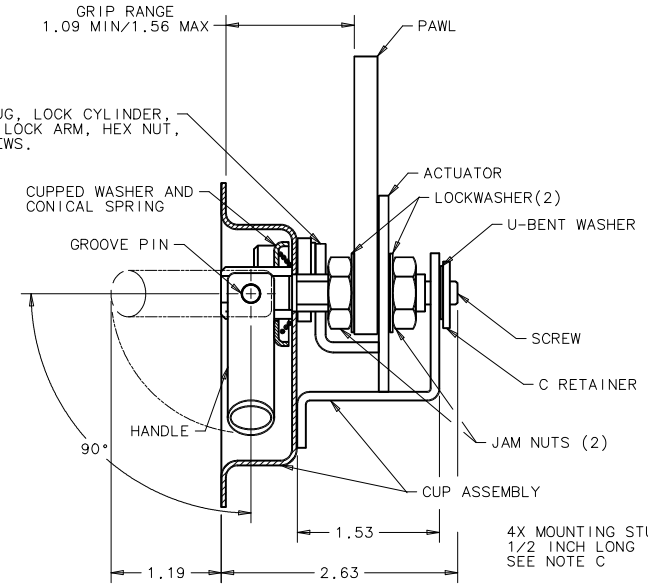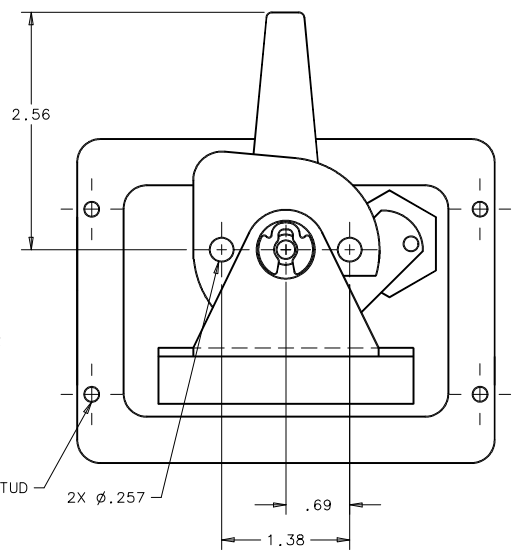
PANEL PREPARATION