PART NUMBER	TOTAL GRIP	XX
D2-513-707-1XX	2.5-3.4	07
D2-513-708-1XX	3.5-4.4	08
D2-513-709-1XX	4.5-5.4	09
D2-513-710-1XX	5.5-6.4	10
D2-513-711-1XX	6.5-7.4	11
D2-513-712-1XX	7.5-8.4	12
D2-513-713-1XX	8.5-9.4	13
D2-513-714-1XX	9.5-10.4	14
D2-513-715-1XX	10.5-11.4	15
D2-513-716-1XX	11.5-12.4	16
D2-513-717-1XX	12.5-13.4	17
D2-513-718-1XX	13.5-14.4	18
D2-513-719-1XX	14.5-15.4	19
D2-513-720-1XX	15.5-16.4	20
D2-513-721-1XX	16.5-17.4	21
D2-513-722-1XX	17.5-18.4	22
D2-513-723-1XX	18.5-19.4	23
D2-513-724-1XX	19.5-20.4	24

PART NUMBER	TOTAL GRIP	XX
D2-513-725-1XX	20.5-21.4	25
D2-513-726-1XX	21.5-22.4	26
D2-513-727-1XX	22.5-23.4	27
D2-513-728-1XX	23.5-24.4	28
D2-513-729-1XX	24.5-25.4	29
D2-513-730-1XX	25.5-26.4	30
D2-513-731-1XX	26.5-27.4	31
D2-513-732-1XX	27.5-28.4	32
D2-513-733-1XX	28.5-29.4	33
D2-513-734-1XX	29.5-30.4	34
D2-513-735-1XX	30.5-31.4	35
D2-513-736-1XX	31.5-32.4	36
D2-513-737-1XX	32.5-33.4	37
D2-513-738-1XX	33.5-34.4	38
D2-513-739-1XX	34.5-35.4	39
D2-513-740-1XX	35.5-36.4	40
D2-513-741-1XX	36.5-37.4	41
D2-513-742-1XX	37.5-38.4	42

REVISION HISTORY			
REV	DATE	BY	DESCRIPTION
A	31MAY2016	DKM/YGC	PRN: P2016-1247

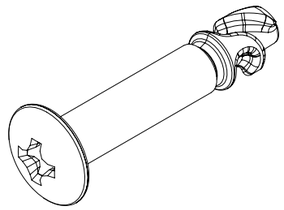

SCALE 3:1

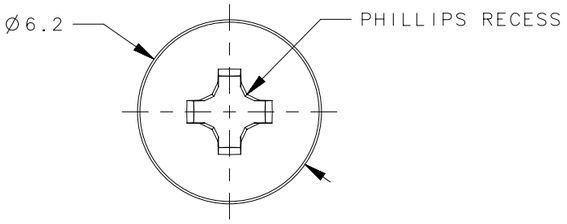

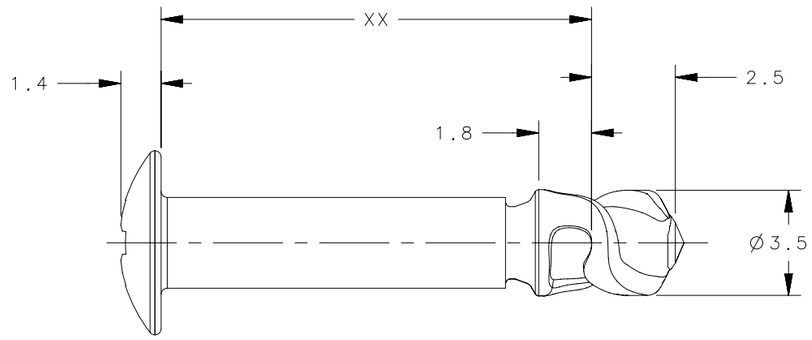

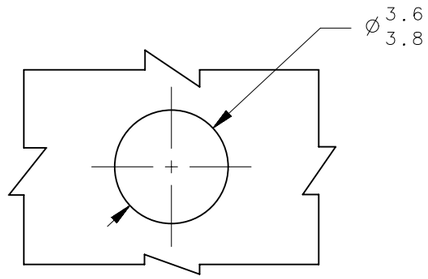

STUD PANEL PREPARATION

NOTES:
1. PHILLIPS RECESS NOT ORIENTATED WITH CAM.
2. TOTAL GRIP INCLUDES BOTH PANELS PLUS 0.5mm ADJUSTMENT VALUE FOR RETAINER (WHERE APPLICABLE).

PART NUMBER	TYPE OF COMPONENT	MATERIAL	FINISH
D2-513-7XX-191	STUD	STEEL	ZINC PLATED, BLACK
D2-513-7XX-190	STUD	STEEL	ZINC PLATED
D2-513-7XX-170	STUD	STEEL	CHROME PLATED

SURFACE AREA

VOLUME

PROPRIETARY ITEM

EXCEPT FOR USES EXPRESSLY GRANTED IN WRITING, INFORMATION DISCLOSED HEREON IS CONFIDENTIAL AND ALL RIGHTS, PATENT AND OTHERWISE, ARE RESERVED BY SOUTHCO, INC.

THIRD ANGLE PROJECTION

MILLIMETERS [IN]

TOLERANCES UNLESS OTHERWISE NOTED

ALL DIMENSIONS WITHOUT TOLERANCES ARE FOR REFERENCE ONLY.

PER ASME Y14.5M-1994

southco®
CONNECT·CREATE·INNOVATE

DESCRIPTION: RAPIER SIZE 3.5 STUD

SIZE	SYSTEM	DWG NO.			
A3	NX	J-D2-513-7XX-1XX			
DRAWN BY	DATE	SCALE	SHEET		
DKM/YGC	31MAY2016	5:1	1 OF 1		