

Self-Clinching Standoffs

Series CFSO, CFSOS & CFSOA (Through Threads)

CFSO self-clinching standoffs are designed for quick, easy installation with any standard pneumatic, hydraulic or mechanical press. Through-threaded standoffs are used in metal panels with thickness of .040 in. (1.0 mm) and up.
No secondary operation, such as reaming or deburring, is necessary prior to installation.

Series	Material	Finish
CFSO	Heat-treated Carbon Steel	Zinc* Clear
CFSOS	300 Series Stainless Steel	Passivated ASTM A967
CFSOA	7075-T6 Aluminum	None

*See Finish Spec. on Page 6.

Thread: Internal 2B, ANSI B1.1 (6H, ANSI/ASME B1.13M).

Use in: CFSO for materials with Rockwell Hardness of B-80 or less.

CFSOS for materials with Rockwell Hardness of B-70 or less.

CFSOA for materials with Rockwell Hardness of B-50 or less.

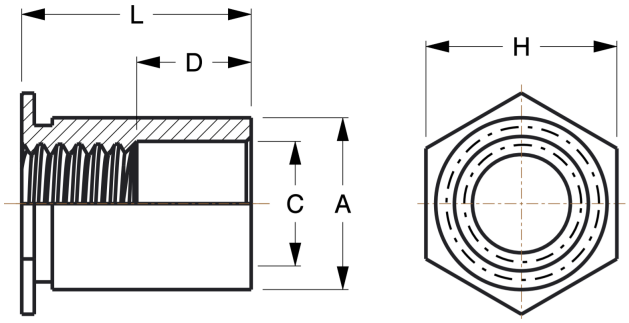

Part Number Structure:

CFSOS 6440-4

- Length Code
- Thread Code
- Body Code (if applicable)
- Series

All Measurements In Inches.

Dimensions & Specifications

Thread Size	Part Number	L Length +.002 -.005 in. .125	.187	.250	.312	.375	.437	.500	.562	.625	.687	.750	.8125	.875	.9375	1.00	1.0625	+.003 −.000	A Dim. +.000 −.005	H Hex Dim. (Nom.)	C Counter-bore ±.005	Min.	Min.
#4-40	CFSO 440	-4	-6	-8	-10	-12	-14	-16	-18	-20	-22	-24						.166	.165	.187	.125	.23	.040
	CFSOS 440	-4	-6	-8	-10	-12	-14	-16	-18	-20	-22	-24											
	CFSOA 440	-4	-6	-8	-10	-12	-14	-16	-18	-20	-22	-24											
#4-40	CFSO 6440	-4	-6	-8	-10	-12	-14	-16	-18	-20	-22	-24						.213	.212	.25	.125	.27	.040
	CFSOS 6440	-4	-6	-8	-10	-12	-14	-16	-18	-20	-22	-24											
	CFSOA 6440	-4	-6	-8	-10	-12	-14	-16	-18	-20	-22	-24											
D ±.0156		None				.1875				.3125				.4375									

Continued on next page.

Self-Clinching Standoffs

Series CFSO, CFSOS & CFSOA (Through Threads)



Continued from previous page.

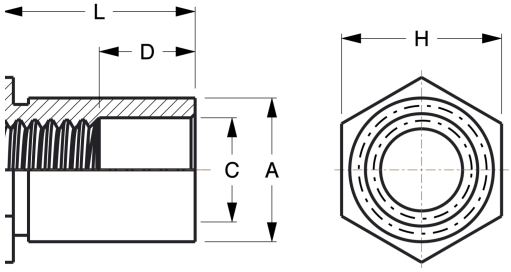

All Measurements In Inches.

Dimensions & Specifications

Thread Size	Part Number	L Length +.002 –.005 in. .125	.187	.250	.312	.375	.437	.500	.562	.625	.687	.750	.812	.875	.937	1.00	1.062	+.003 –.000	A Dim. +.000 –.005	H Hex Dim. (Nom.)	C Counter-bore ±.005	Min.	Min.
#6-32	CFSO 632	-4	-6	-8	-10	-12	-14	-16	-18	-20	-22	-24	-26	-28	-30	-32	-34	.213	.212	.25	.156	.27	.04
	CFSOS 632	-4	-6	-8	-10	-12	-14	-16	-18	-20	-22	-24	-26	-28	-30	-32	-34						
	CFSOA 632	-4	-6	-8	-10	-12	-14	-16	-18	-20	-22	-24	-26	-28	-30	-32	-34						
#6-32	CFSO 8632	-4	-6	-8	-10	-12	-14	-16	-18	-20	-22	-24	-26	-28	-30	-32	-34	.281	.280	.312	.156	.31	.05
	CFSOS 8632	-4	-6	-8	-10	-12	-14	-16	-18	-20	-22	-24	-26	-28	-30	-32	-34						
	CFSOA 8632	-4	-6	-8	-10	-12	-14	-16	-18	-20	-22	-24	-26	-28	-30	-32	-34						
#8-32	CFSO 832	-4	-6	-8	-10	-12	-14	-16	-18	-20	-22	-24	-26	-28	-30	-32	-34	.281	.280	.312	.188	.31	.05
	CFSOS 832	-4	-6	-8	-10	-12	-14	-16	-18	-20	-22	-24	-26	-28	-30	-32	-34						
	CFSOA 832	-4	-6	-8	-10	-12	-14	-16	-18	-20	-22	-24	-26	-28	-30	-32	-34						
#10-32	CFSO 1032	-4	-6	-8	-10	-12	-14	-16	-18	-20	-22	-24	-26	-28	-30	-32	-34	.281	.280	.312	.203	.31	.05
	CFSOS 1032	-4	-6	-8	-10	-12	-14	-16	-18	-20	-22	-24	-26	-28	-30	-32	-34						
	CFSOA 1032	-4	-6	-8	-10	-12	-14	-16	-18	-20	-22	-24	-26	-28	-30	-32	-34						
D ±.0156		None				.1875				.3125				.4375									

Continued on next page.



Self-Clinching Standoffs

Series CFSO, CFSOS & CFSOA (Through Threads)

Continued from previous page.

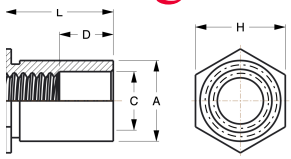

All Measurements In Millimeters.

Dimensions & Specifications

Thread Size	Part Number	L Length +.05 –.13 mm												+.08 –.00	A Dim. +.00 –.13	H Hex Dim. (Nom.)	C Counter-bore ±.13	Min.	Min.
		3	4	6	8	10	12	14	16	18	20	22	25						
M3x0.5	CFSO M3	-3	-4	-6	-8	-10	-12	-14	-16	-18				4.22	4.2	4.8	3.2	6.0	1.0
	CFSOS M3	-3	-4	-6	-8	-10	-12	-14	-16	-18									
	CFSOA M3	-3	-4	-6	-8	-10	-12	-14	-16	-18									
M3x0.5	CFSO 3.5M3	-3	-4	-6	-8	-10	-12	-14	-16	-18				5.41	5.39	6.4	3.2	6.8	1.0
	CFSOS 3.5M3	-3	-4	-6	-8	-10	-12	-14	-16	-18									
	CFSOA 3.5M3	-3	-4	-6	-8	-10	-12	-14	-16	-18									
M3.5x0.6	CFSO M3.5	-3	-4	-6	-8	-10	-12	-14	-16	-18	-20	-22	-25	5.41	5.39	6.4	4.0	6.8	1.0
	CFSOS M3.5	-3	-4	-6	-8	-10	-12	-14	-16	-18	-20	-22	-25						
	CFSOA M3.5	-3	-4	-6	-8	-10	-12	-14	-16	-18	-20	-22	-25						
M4x0.7	CFSO M4	-3	-4	-6	-8	-10	-12	-14	-16	-18	-20	-22	-25	7.14	7.12	7.9	4.8	8.0	1.27
	CFSOS M4	-3	-4	-6	-8	-10	-12	-14	-16	-18	-20	-22	-25						
	CFSOA M4	-3	-4	-6	-8	-10	-12	-14	-16	-18	-20	-22	-25						
M5x0.8	CFSO M5	-3	-4	-6	-8	-10	-12	-14	-16	-18	-20	-22	-25	7.14	7.12	7.9	5.35	8.0	1.27
	CFSOS M5	-3	-4	-6	-8	-10	-12	-14	-16	-18	-20	-22	-25						
	CFSOA M5	-3	-4	-6	-8	-10	-12	-14	-16	-18	-20	-22	-25						
D ±.4		None				4.0			8.0			11.0							

Continued on next page.

Self-Clinching Standoffs

Series CFBSO, CFBSOS & CFBSOA (Blind Threads)



CFBSO self-clinching standoffs are designed for quick, easy installation with any standard pneumatic, hydraulic or mechanical press. Blind standoffs are used in metal panels with thickness of .040 in. (1.0 mm) and up. No secondary operation, such as reaming or deburring, is necessary prior to installation.

Series	Material	Finish
CFBSO	Heat-treated Carbon Steel	Zinc* Clear
CFBSOS	300 Series Stainless Steel	Passivated ASTM A967
CFBSOA	7075-T6 Aluminum	None

*See Finish Spec. on Page 6.

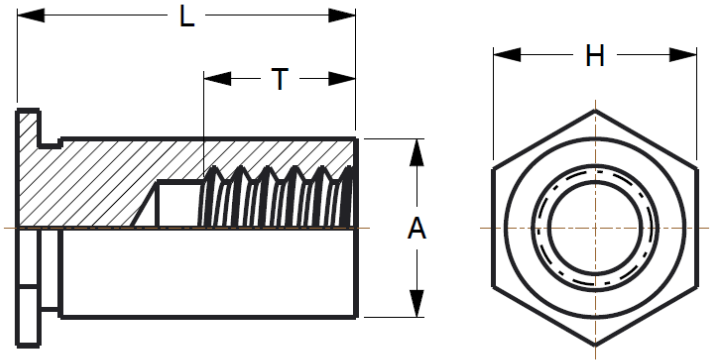

Thread: Internal 2B ANSI B1.1 (6H, ANSI/ASME B1.13M).

Use in: CFBSO for materials with Rockwell Hardness of B-80 or less.

CFBSOS for materials with Rockwell Hardness of B-70 or less.

CFBSOA for materials with Rockwell Hardness of B-50 or less.

Part Number Structure:

CFBSOS 6440-10

- Length Code
- Thread Code
- Body Code (if applicable)
- Series

All Measurements In Inches.

Dimensions & Specifications

Thread Size	Part Number	L Length +.002 –.005 in. .312	.375	.437	.500	.562	.625	.687	.750	.812	.875	.937	1.00	1.062	+.003 –.000	A Dim. +.000 –.005	H Hex Dim. (Nom.)	Min.	Min.
#4-40	CFBSO 440	-10	-12	-14	-16	-18	-20	-22	-24	-26	-28	-30	-32	-34	.166	.165	.187	.23	.040
	CFBSOS 440	-10	-12	-14	-16	-18	-20	-22	-24	-26	-28	-30	-32	-34					
	CFBSOA 440	-10	-12	-14	-16	-18	-20	-22	-24	-26	-28	-30	-32	-34					
#4-40	CFBSO 6440	-10	-12	-14	-16	-18	-20	-22	-24	-26	-28	-30	-32	-34	.213	.212	.25	.27	.040
	CFBSOS 6440	-10	-12	-14	-16	-18	-20	-22	-24	-26	-28	-30	-32	-34					
	CFBSOA 6440	-10	-12	-14	-16	-18	-20	-22	-24	-26	-28	-30	-32	-34					
T Min.		.156		.187	.25			.375											

Continued on next page.



Self-Clinching Standoffs

Series CFBSO, CFBSOS & CFBSOA (Blind Threads)

Continued from previous page.

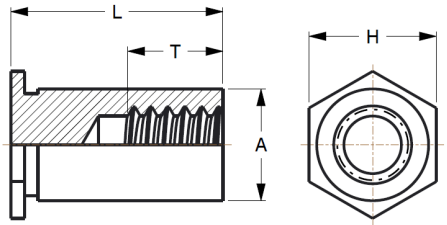

All Measurements In Inches.

Dimensions & Specifications

Thread Size	Part Number	L Length +.002 –.005 in. .312	.375	.437	.500	.562	.625	.687	.750	.812	.875	.937	1.00	1.062	+.003 –.000	A Dim. +.000 –.005	H Hex Dim. (Nom.)	Min.	Min.
#6-32	CFBSO 632	-10	-12	-14	-16	-18	-20	-22	-24	-26	-28	-30	-32	-34	.213	.212	.25	.27	.04
	CFBSOS 632	-10	-12	-14	-16	-18	-20	-22	-24	-26	-28	-30	-32	-34					
	CFBSOA 632	-10	-12	-14	-16	-18	-20	-22	-24	-26	-28	-30	-32	-34					
#6-32	CFBSO 8632	-10	-12	-14	-16	-18	-20	-22	-24	-26	-28	-30	-32	-34	.281	.280	.312	.31	.05
	CFBSOS 8632	-10	-12	-14	-16	-18	-20	-22	-24	-26	-28	-30	-32	-34					
	CFBSOA 8632	-10	-12	-14	-16	-18	-20	-22	-24	-26	-28	-30	-32	-34					
#8-32	CFBSO 832	-10	-12	-14	-16	-18	-20	-22	-24	-26	-28	-30	-32	-34	.281	.280	.312	.31	.05
	CFBSOS 832	-10	-12	-14	-16	-18	-20	-22	-24	-26	-28	-30	-32	-34					
	CFBSOA 832	-10	-12	-14	-16	-18	-20	-22	-24	-26	-28	-30	-32	-34					
#10-32	CFBSO 1032	-10	-12	-14	-16	-18	-20	-22	-24	-26	-28	-30	-32	-34	.281	.280	.312	.31	.05
	CFBSOS 1032	-10	-12	-14	-16	-18	-20	-22	-24	-26	-28	-30	-32	-34					
	CFBSOA 1032	-10	-12	-14	-16	-18	-20	-22	-24	-26	-28	-30	-32	-34					
T Min.		.156		.187	.25			.375											

Continued on next page.

Self-Clinching Standoffs

Series CFBSO, CFBSOS & CFBSOA (Blind Threads)



Continued from previous page.

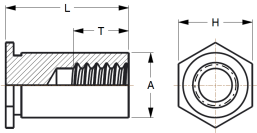

All Measurements In Millimeters.

Dimensions & Specifications

Thread Size	Part Number	L Length +.05 –.13 mm										+.08 –.00	A Dim. +.00 –.13	H Hex Dim. (Nom.)	Min.	Min.
		6	8	10	12	14	16	18	20	22	25					
M3x0.5	CFBSO M3	-6	-8	-10	-12	-14	-16	-18	-20	-22	-25	4.22	4.2	4.8	6.0	1.0
	CFBSOS M3	-6	-8	-10	-12	-14	-16	-18	-20	-22	-25					
	CFBSOA M3	-6	-8	-10	-12	-14	-16	-18	-20	-22	-25					
M3x0.5	CFBSO 3.5M3	-6	-8	-10	-12	-14	-16	-18	-20	-22	-25	5.41	5.39	6.4	6.8	1.0
	CFBSOS 3.5M3	-6	-8	-10	-12	-14	-16	-18	-20	-22	-25					
	CFBSOA 3.5M3	-6	-8	-10	-12	-14	-16	-18	-20	-22	-25					
M3.5x0.6	CFBSO M3.5	-6	-8	-10	-12	-14	-16	-18	-20	-22	-25	5.41	5.39	6.4	6.8	1.0
	CFBSOS M3.5	-6	-8	-10	-12	-14	-16	-18	-20	-22	-25					
	CFBSOA M3.5	-6	-8	-10	-12	-14	-16	-18	-20	-22	-25					
M4x0.7	CFBSO M4	-6	-8	-10	-12	-14	-16	-18	-20	-22	-25	7.14	7.12	7.9	8.0	1.27
	CFBSOS M4	-6	-8	-10	-12	-14	-16	-18	-20	-22	-25					
	CFBSOA M4	-6	-8	-10	-12	-14	-16	-18	-20	-22	-25					
M5x0.8	CFBSO M5	-6	-8	-10	-12	-14	-16	-18	-20	-22	-25	7.14	7.12	7.9	8.0	1.27
	CFBSOS M5	-6	-8	-10	-12	-14	-16	-18	-20	-22	-25					
	CFBSOA M5	-6	-8	-10	-12	-14	-16	-18	-20	-22	-25					
T Min.		3.2	4.0		5.0	6.5		9.5								

Continued on next page.



Self-Clinching Standoffs

Series CFSO, CFSOS, CFSOA, CFBSO, CFBSOS & CFBSOA

Continued from previous page.

Installation & Performance Data

	Thread Code	Standoff Material	Sheet Material: .060 in. 5052-H34 Aluminum: Installation Force (lbs.)	Pushout (lbs.)	Torque-out (in.-lbs.)	Pull Through (lbs.)	.060 in. Cold-rolled Steel: Installation Force (lbs.)	Pushout (lbs.)	Torque-out (in.-lbs.)	Pull Through (lbs.)	Rec. Tighten Torque Max. (in.-lbs.)
INCH (in.)	440	Steel	1100	160	11	280	2200	225	19	330	4.75
		Stainless Steel	1100	160	11	224	2200	225	19	264	3.8
		Aluminum	1100	160	11	168	nr	nr	nr	nr	2.85
	6440, 632	Steel	1700	300	25	280	3300	420	35	380	4.75, 8.75
		Stainless Steel	1700	300	25	248	3300	420	35	304	3.8, 7
		Aluminum	1700	300	25	186	nr	nr	nr	nr	2.85, 5.25
	8632, 832, 1032	Steel	2400	400	45	580	4000	560	75	700	8.75, 18, 32
		Stainless Steel	2400	400	45	464	4000	560	75	560	7, 14.4, 25.6
		Aluminum	2400	400	45	348	nr	nr	nr	nr	5.25, 11, 19

	Thread Code	Standoff Material	Sheet Material: 1.5mm 5052-H34 Aluminum: Installation Force (kN)	Pushout (N)	Torque-out (N•m)	Pull Through (N)	1.5mm Cold-rolled Steel: Installation Force (kN)	Pushout (N)	Torque-out (N•m)	Pull Through (N)	Rec. Tighten Torque Max. (N•m)
METRIC (mm)	M3	Steel	4.9	710	1.24	1245	9.8	1000	2.15	1465	.55
		Stainless Steel	4.9	710	1.24	996	9.8	1000	2.15	1172	.44
		Aluminum	4.9	710	1.24	747	nr	nr	nr	nr	.33
	3.5M3	Steel	7.6	1330	2.82	1245	14.7	1860	3.95	1465	.55
		Stainless Steel	7.6	1330	2.82	996	14.7	1860	3.95	1172	.44
		Aluminum	7.6	1330	2.82	747	nr	nr	nr	nr	.33
	M4, M5	Steel	10.7	1780	5.08	2575	17.8	2490	8.47	3110	2, 3.6
		Stainless Steel	10.7	1780	5.08	2060	17.8	2490	8.47	2488	1.6, 2.88
		Aluminum	10.7	1780	5.08	1545	nr	nr	nr	nr	1.2, 2.16

nr = Not recommended.

RECOMMENDED INSTALLATION PROCEDURE

1. Insert Standoff through hole in sheet into anvil.
2. Apply only sufficient squeezing force between parallel surfaces of punch and anvil to embed hex head flush in sheet. Avoid excessive pressures.

